PO BOX 4394
SANTA ROSA, CA
95402 USA

P (707) 525-9941
F (707) 575-7046
EMGPICKUPS.COM

0230-0306rA

RT / RTC HOUSING

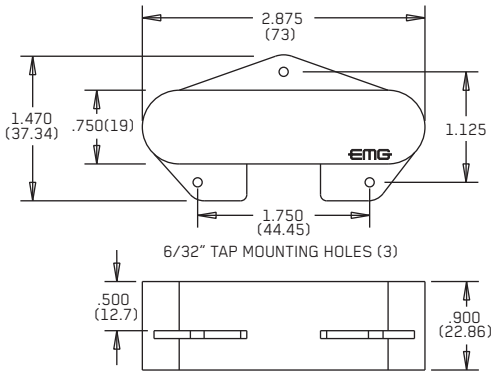

FT / FTC HOUSING

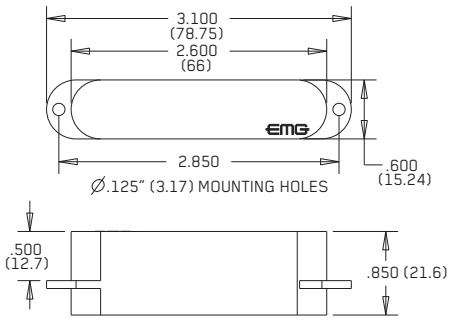

INSTALLATION INFORMATION
EMG MODELS: T & TC SYSTEM

SPECIFICATIONS:

	MODEL:			
	FT Pickup	RT Pickup	FTC Pickup	RTC Pickup
Logo Color	Gold	Gold	Silver	Silver
Magnet Type *	A	A	C	C
Resonant Frequency (KHz)	4.50	3.50	4.80	3.75
Output Voltage (String)	1.00	1.00	1.00	1.00
Output Voltage (Strum)	3.00	3.00	3.00	3.00
Output Noise (60 Hz)	-101	-101	-103	-103
Output Impedance (Kohm)	10	10	10	10
Maximum Supply (Volts DC)	27	27	27	27
Pickup Set Specifications:				
Current @9V (Microamps)	160			
Battery Life (Hours)	1500			

*Note: Magnet Type: A (Alnico) C (Ceramic)

INSTALLATION NOTES:

The T and TC Pickup Systems are designed to directly replace the pickups in a Telecaster* type guitar. There are two distinct pickups included in the System. The FT (Front Tele) pickup is small and can mount in the body with wood screws (older guitars) or into the pickguard using screws and springs (newer guitars). Hardware is included for either style of installation. The T System uses Alnico magnets for a fuller sound, while the TC uses Ceramic magnets for a brighter sound. There are some Telecaster style guitars where the battery will not fit into the control cutout, the newer instruments are computer routed and usually a battery will fit where shown in the diagrams. Before installing the EMG Pickups and controls, it is recommended that you determine if the battery will fit or not and make a decision about either routing the control compartment larger, or perhaps installing a battery holder in the rear of the instrument (recommended).

INCLUDED WITH EACH SET:

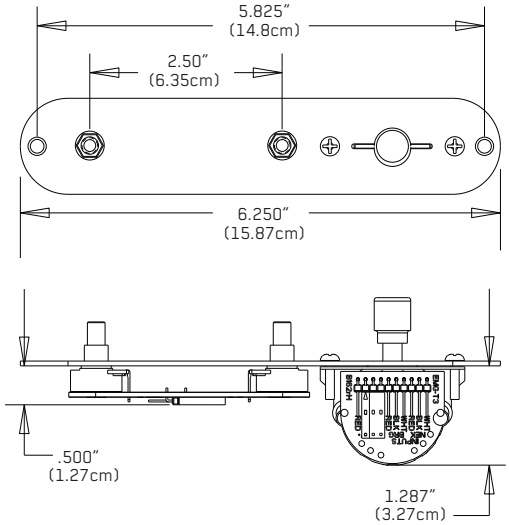

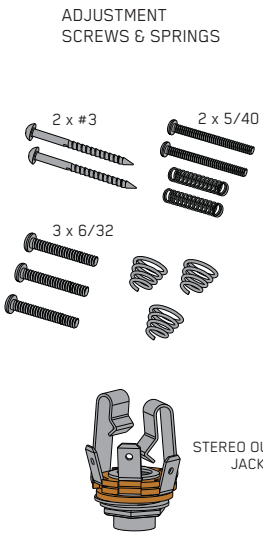

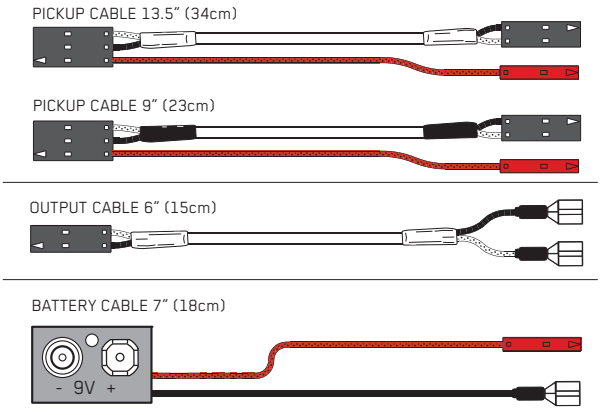

WARRANTY

All EMG Pickups and accessories are warranted for a period of two years. This warranty does not cover failure due to improper installation, abuse or damage. If upon examination the pickup is determined to be defective, a replacement will be made. Warranty replacement products are covered by this same warranty. This warranty covers only those pickups and accessories sold by authorized EMG Dealers. This warranty is not transferable.

© 2016 Copyright EMG INC. All Rights Reserved.

* Tele and Telecaster are registered Trademarks of FMIC

Installation Instructions:
EMG Models: T & TC SET

General Notes:

Every attempt has been made to make this a solderless installation.
There are some instances where this is not possible;

1) If your instrument uses the long panel output jack and you had passive pickups you will need a new stereo output jack, the Switchcraft 152B is recommended. Soldering to the new jack will be required, see Diagram #14 on page 4.
2) Make sure the battery fits into the instrument control compartment before you proceed with the installation. It may be necessary to enlarge the control compartment in both width and depth to fit the battery and controls. A separate battery compartment on the back of the instrument is always recommended.

******Tips and Tricks**** Start your installation by:**

1) Determine which type output jack your instrument has. A Stereo 12B type is included, but if you have a long panel jack a SwitchCraft 152B Long Panel Jack will be required.
2) Remove the strings, remove any existing Pickups and controls (remember the order and function of each control)
3) Determine a good spot for the Pickup Buss and make sure the cable or wires from the selection switch will reach the Pickup Buss,
4) Install the EMG Volume and Tone Controls and tighten them in.
5) Then install the pickups keeping any excess cable under the pickup rather than in the control cavity.
6) IMPORTANT: EMG Active pickups do not require a string ground wire! DO NOT Reconnect the string ground, it is unnecessary.

Step 1:

1) Remove the strings from the instrument. Remove the existing controls and switch from the control plate by cutting the pickup wires at the switch. Also cut the wires to the output jack and remove it. Cut the ground wire coming from the bridge, it will not be reconnected. Unscrew and remove the pickguard. The fingerboard pickup may or may not be attached to the pickguard. Remove the fingerboard pickup from the body or from the pickguard.
2) It is necessary to remove the bridge from the instrument to remove the bridge pickup. Unscrew the 4 large wood screws holding the bridge to the body and remove the pickup from the bridge.

Mounting the Fingerboard Pickup:
Refer to Diagrams #1 or #2

1) First, make sure the fingerboard pickup fits in the cutout of the pickguard. It may neccesary to enlarge the pickup cutout.
2) Attach the pickup cable as shown in Diagram #2 then either;
   a) Mount the Fingerboard pickup by attaching it to the body with the #3 x 1"wood screws included as in Diagram #1 or,
   b) Mount the pickup to the pickguard using the 5/40 x 1" machine screws and springs included, the pickup adjustment tabs are pre-threaded for the 5/40 screws as in Diagram #2.

Don't worry about the pickup height adjustment at this time, it will be adjusted later.

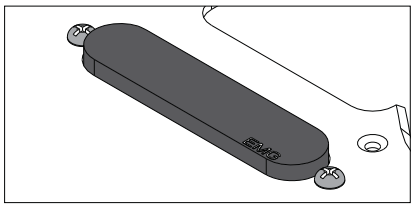

Mounting the Bridge Pickup:
Refer to Diagrams 3 and #4

1) As mentioned earlier, it is necessary to remove the bridge in order to replace the pickup. This is easily done by unscrewing the 4 screws that hold the bridge to the body. After removing the bridge, simply replace the pickup using the three 6/32 screws and the conical springs provided. Plug on the pickup cable to the back of the pickup as shown in Diagram #3 and route the cable into the control cavity. Don't worry about the pickup height adjustment at this time, it will be adjusted later. Diagram #4 shows a top view of the installed pickup in the bridge.

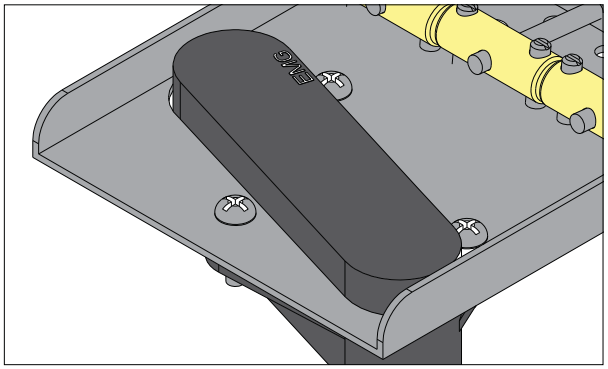

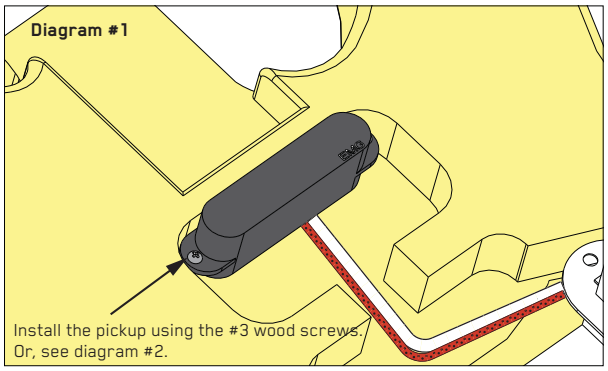

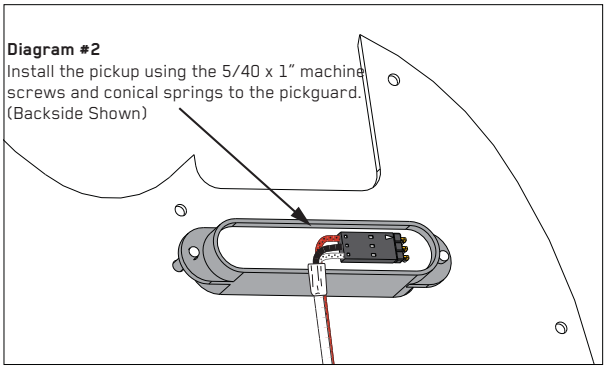

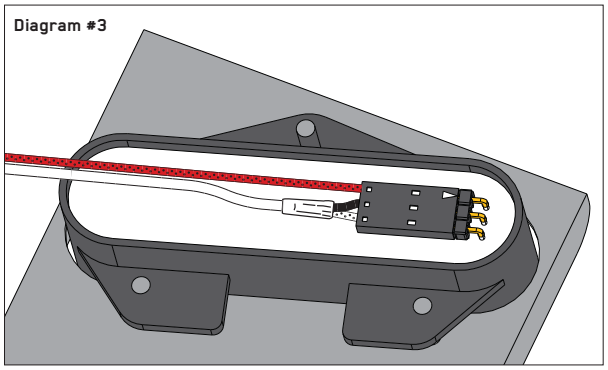

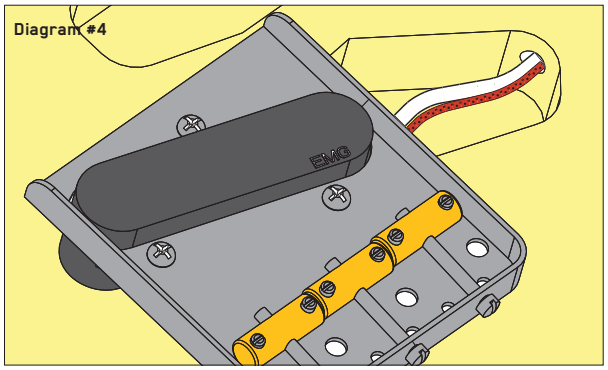

* Tele and Telecaster are registered Trademarks of FMIC

Installation Instructions:
EMG Models: T & TC SET

Mounting the Controls:
Refer to Diagram #5
1) Remove the existing controls from the control plate and mount the EMG controls as shown to the right. Be sure the PC Board on the switch is facing the same direction as the diagram shows.

Diagram #5

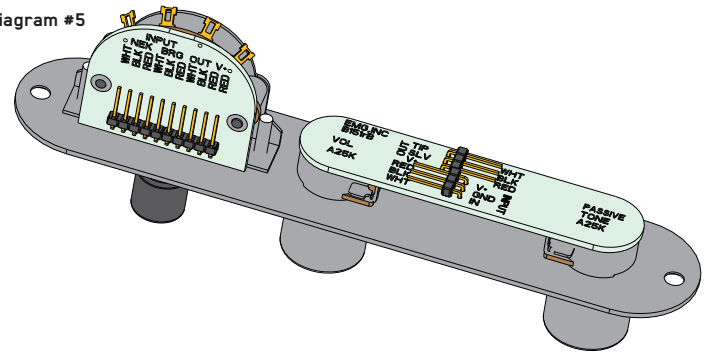

Plug in the Pickups:
Refer to Diagram #6
1) Plug the Pickup cables onto the switch PC Board as shown.
Neck Pickup to the NEK Input.
Bridge Pickup to the BRG input.

Diagram #6

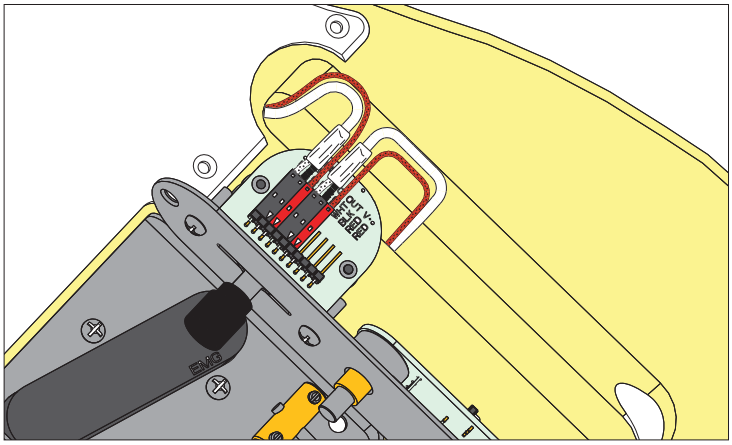

Switch Output Cable;
Refer to Diagram #7
1) Install the 2-pin switch output cable from the switch to the control board. Also, install the red wire from the switch to the control board.

Diagram #7

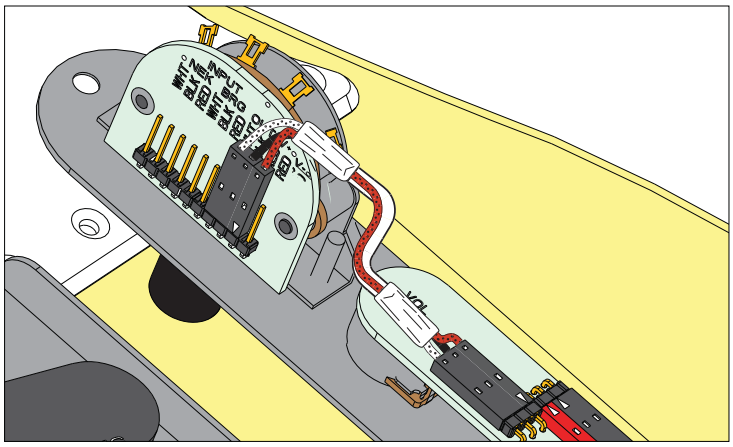

Output Cable and Battery Installation;
Refer to Diagram #8
1) Plug the output cable from the control board to the output jack.
White to the Tip (T) terminal
Black to the Sleeve (S) terminal
Battery Black to the Ring (R) Terminal.
Refer to Diagram #9 for further clarity of the Jack terminals.
2) Plug the Red wire from the battery clip the the terminal on the control board marked Red.

As mentioned before fitting the battery can be a problem. Make sure the battery fits snuggly, but is easily removable.

This completes the installation, if the Front Pickup was installed into the body as in Diagram #1, go ahead and string the guitar, adjust the pickup, then slide the pickguard under the strings and screw it to the body.

Test the pickups by tapping on them while the instrument is plugged in, and if everything seems OK, fasten the control plate and play away.

Diagram #8

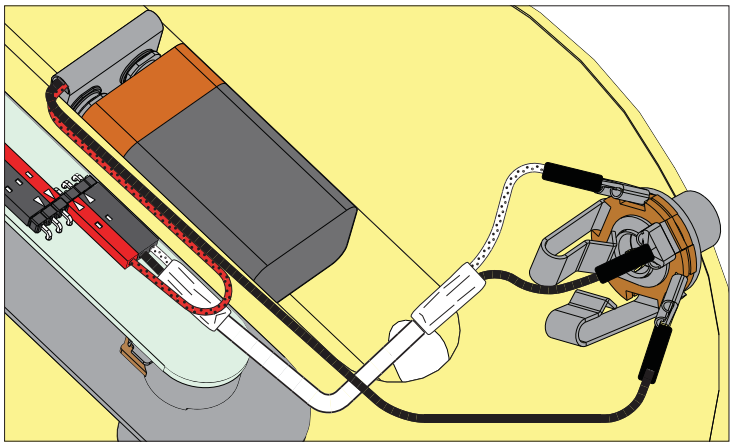

Diagram #9

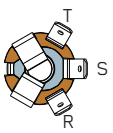

Installation Instructions:

EMG Models: T & TC SET

Alternate diagrams:

The diagrams shown here all use the B162 (T3) switch that is designed for Fender Telecaster*. When the switch is mounted to the Tele control plate the Bridge and Neck Pickup input legend will be as it says on the PC Board. If you use the B162 for another type of guitar, you might have the PC Board facing the other direction. If this is so, simply reverse the inputs. Use the BRG input for the Neck Pickup, and use the NEK input for the Bridge Pickup.

Diagram #10

This diagram shows the wiring for the standard installation included in these instructions.

Diagram #11

This diagram shows discrete controls with a volume control and passive tone control. It is shown mounted to the Tele control plate, but the wiring would be the same for any two pickup guitar using the T3 switch. But as stated above, dpending on which direction you install the selection switch the pickup inputs might need to be reversed.

Diagram #12

This diagram shows an active tone control added to the guitar. The control could be any EMG Active control, like the SPC, RPC, EXG, VLPF or a BT Control. This installation would be similar to an EMG-X installation using the VLPF Active tone control.

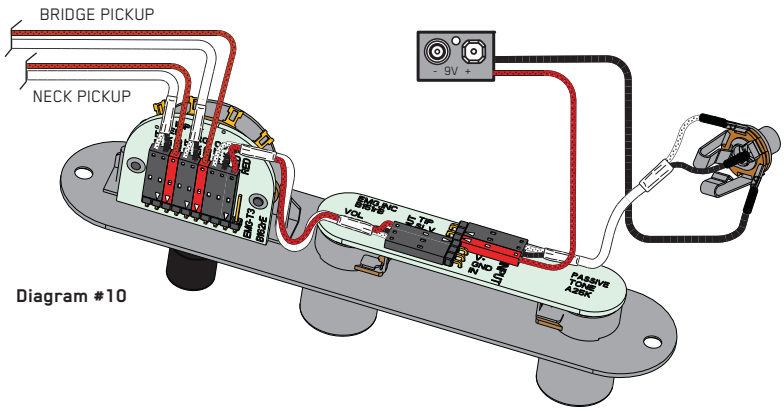

Diagram #10

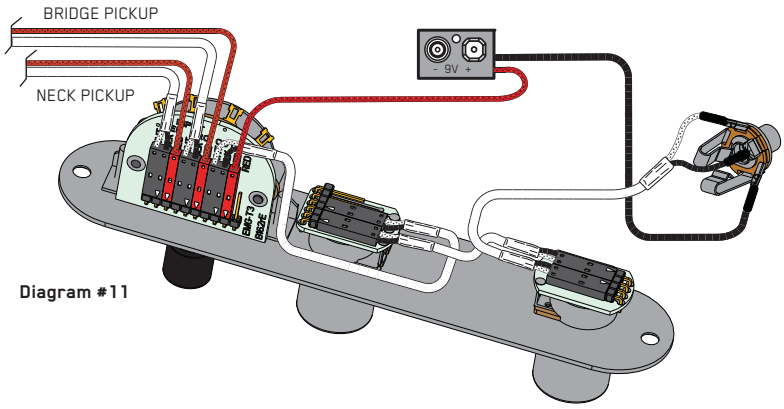

Diagram #11

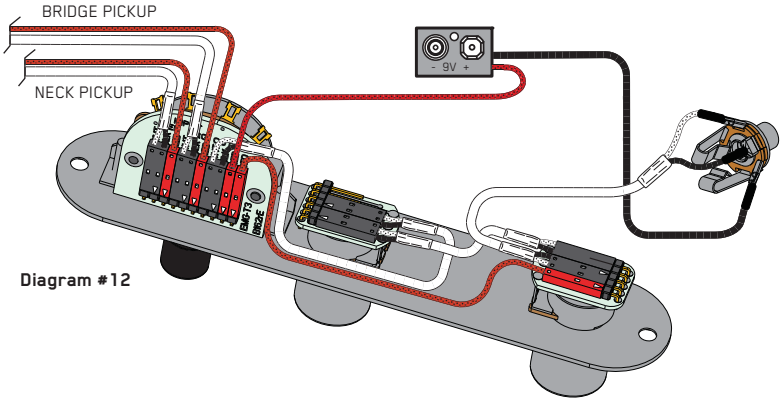

Diagram #12

Diagram #13

If the instrument has a Battery Holder:

If your instrument has a 9 or 18-Volt battery holder you can still use the EMG Connectors to supply power to the pickups.
Simply cut and strip the wires from the battery clip provided.
Twist the wires together (Red to Red and Black to Black) and use the shrink tubing included to cover the connections.
Soldering the wires is recommended.

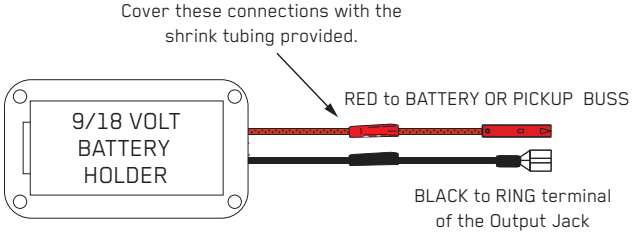

Diagram #14

Soldering to the 152B Panel Jack:

If your instrument has a long Panel Jack like the one below you will have to solder the output cable as shown.
Ground (Black) to the Sleeve
Signal (White) to the Tip
Battery Negative (Black) to the Ring

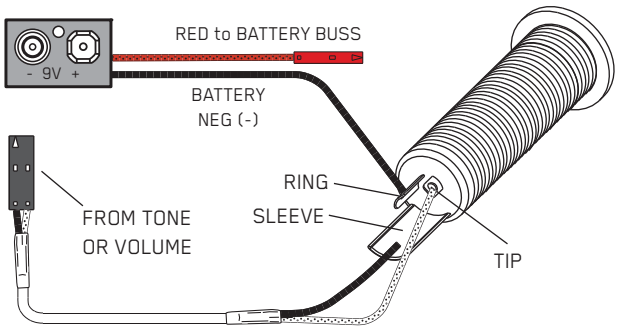

* Tele and Telecaster are registered Trademarks of FMIC