SBC210LM

Portable Rechargeable Battery Housing

Manual for the Shure SBC210LM portable rechargeable battery housing.
Version: 0.3 (2025-H)

Table of Contents

SBC210LM Portable Rechargeable Battery Housing 3

Explanation of Symbols 3

Safety Information for Batteries 3

Storing Batteries 3

Products with AC Adapters 4

Important Product Regulatory Information 4

Introduction to EMC 4

Regulatory Information for Class A EMC Products 5

SBC210LM Portable Rechargeable Battery Housing 6

Features 7

Charger Overview 7

Batteries 8

Included Components 8

Optional Accessories 8

Connecting DC Power 8

Inserting Batteries into the Charging Bay 9

Charge Status LED 9

Recovering a Battery from Deep Discharge 9

Changing the Charger Module 9

Troubleshooting 10

Specifications 10

Environmental Regulatory Information 11

中国 RoHS 11

Battery Regulatory Information 11

SBC210LM
Portable Rechargeable Battery Housing

Explanation of Symbols

⚠	This symbol indicates that dangerous voltage constituting a risk of electric shock is present within this unit.
⚠	This symbol indicates that there are important operating and maintenance instructions in the literature accompanying this unit.

Safety Information for Batteries

1. Battery packs may explode or release toxic materials. Risk of fire or burns. Do not open, crush, modify, disassemble, heat above 140°F (60°C), or incinerate.
2. Follow instructions from manufacturer
3. Only use Shure charger to recharge Shure rechargeable batteries

   WARNING:

   ⚠

   Danger of explosion if battery incorrectly replaced. Replace only with same or equivalent type.

   Do not dispose of the battery along with household waste. Check with local vendor for proper disposal of used battery packs.

4. Never put batteries in mouth. If swallowed, contact your physician or local poison control center
5. In the event of a cell leaking, do not allow the liquid to come in contact with the skin or eyes. If contact has been made, wash the affected area with copious amounts of water and seek medical advice.
6. Do not short circuit; may cause burns or catch fire
7. Do not charge or use battery packs other than Shure rechargeable batteries
8. Batteries (battery pack or batteries installed) shall not be exposed to excessive heat such as sunshine, fire or the like
9. Do not immerse the battery in liquid such as water, beverages, or other fluids.
10. Do not attach or insert battery with polarity reversed.
11. Keep away from small children.
12. Do not use abnormal batteries.
13. Pack the battery securely for transport.

Note: Use only with the included power supply, batteries, or a Shure-approved equivalent.

Storing Batteries

If batteries are to be stored for more than eight days, they should be placed into a temperature controlled storage area. Recommended battery storage temperature is 10 to 25°C (50 to 77°F).

Additional battery storage information is available at shure.com/battery-storage.

Products with AC Adapters

1. Use only AC adapter that is provided with your product.
2. If this product is powered by an AC adapter other than the AC adapter that comes with your product, it could result in personal injury and/or product failure.

This equipment is not suitable for use in locations where children are likely to be present.

This symbol represents protective earth or protective ground and should not be disconnected.



Important Product Regulatory Information

EMC conformance testing is based on the use of supplied and recommended cable types. The use of other cable types may degrade EMC performance.

Introduction to EMC

Electromagnetic Interference (EMI) is any signal or emission, radiated in free space or conducted along power or signal leads, that endangers the functioning of radio navigation or other safety service or seriously degrades, obstructs, or repeatedly interrupts a licensed radio communications service. Radio communications services include but are not limited to AM/FM commercial broadcast, television, cellular services, radar, air-traffic control, pager, and Personal Communication Services (PCS). These licensed radio services, and unlicensed radio services, such as WLAN, ZIGBEE or Bluetooth, along with unintentional radiators such as digital devices contribute to the electromagnetic environment.

Electromagnetic Compatibility (EMC) is the ability of items of electronic equipment to function properly together in the electronic environment. While this equipment has been designed and determined to be compliant with regulatory agency limits for EMI, there is no guarantee that interference will not occur in a particular installation.

Shure products are designed, tested, and classified for their intended electromagnetic environment. These electromagnetic environment classifications generally refer to the following harmonized definitions:

- Class B products are intended for use in residential/domestic environments but may also be used in non-residential/non-domestic environments.

  Note: *The residential/domestic environment is an environment where the use of broadcast radio and television receivers may be expected within a distance of 10 m from where this product is used.*

- Class A products are intended for use in non-residential/non-domestic environments. Class A products may also be utilized in residential/domestic environments but may cause interference and require the user to take adequate corrective measures.

Regulatory Information for Class A EMC Products

EU Class A Warning

This is a Class A product. In a domestic environment this product may cause radio interference in which case the user may be required to take adequate measures.

CE Notice

Hereby, Shure Incorporated declares that this product with CE Marking has been determined to be in compliance with European Union requirements.

The full text of the EU declaration of conformity is available at the following site: https://www.shure.com/en-EU/support/declarations-of-conformity.

UKCA Notice

Hereby, Shure Incorporated declares that this product with UKCA Marking has been determined to be in compliance with UKCA requirements.

The full text of the UK declaration of conformity is available at the following site: https://www.shure.com/en-GB/support/declarations-of-conformity.

UK Cybersecurity

UK SI 2023 NO. 1007 STATEMENT OF COMPLIANCE

Product Type: Relevant connectable products as defined by The Product Security and Telecommunications Infrastructure (Security Requirements for Relevant Connectable Products) Regulations 2023.

Manufacturer Statement: We, Shure Incorporated, certify and declare as manufacturer under our sole responsibility, that the above mentioned product(s) conform(s) to Schedule 2 of the essential requirements of the listed applicable United Kingdom Statutory Instruments (including their amendments) and the associated norms.

Information on how to report security issues: The latest version of Shure's Disclosure policy can be found at the following link: https://www.shure.com/en-GB/about-us/security

Security update periods: Shure provides support regarding hardware and software updates that continue the integral cyber security safety of Shure products up to 24 months after end of life (AEOL). For the full statement regarding Shure's product support policy, and information regarding products end of life status information can be found at the following link: https://www.shure.com/en-GB/about-us/security

Manufacturer:
Shure Incorporated 5800 Touhy Avenue
Niles, Illinois, 60714-4608 U.S.A.
Website: www.Shure.com.

Technical documentation is kept at:
Shure Incorporated, Corporate Global Compliance Engineering Division

UK Importer/Representative:
Shure UK Limited
Unit 2, The IO Centre, Lea Road, Waltham Abbey, Essex, EN9 1AS, U.K.
Phone: +44 (0)1992 - 703058
Email: EMEAsupport@shure.de

On behalf of Manufacturer:



Chad Ayers

01 February 2024 Niles, Illinois

Senior Director, Global Compliance

FCC Notice

This product has been tested and found to comply with the limits for a Class A digital device pursuant to Part 15 of the FCC Rules. These limits are designed to provide reasonable protection against harmful interference when the equipment is operated in a commercial environment. This product generates, uses, and can radiate radio frequency energy and, if not installed and used in accordance with the manufacturer's instruction manual, may cause harmful interference with radio communications. Operation of this product in a residential area is likely to cause harmful interference, in which case you will be required to correct the interference at your own expense.

This device complies with Part 15 of the FCC Rules. Operation is subject to the following two conditions:

1. This device may not cause harmful interference.
2. This device must accept any interference received, including interference that may cause undesired operation.

Notice: The FCC regulations provide that changes or modifications not expressly approved by Shure Incorporated could void your authority to operate this equipment.

For information regarding responsible party and other matters relating to FCC compliance, please contact Shure Incorporated, 5800 W. Touhy Avenue, Niles, Illinois 60714-4608 U.S.A. shure.com/contact

Canada, ISED Notice

Notice: The Industry Canada regulations provide that changes or modifications not expressly approved by Shure Inc. could void your authority to operate this equipment.

This Class A digital apparatus complies with Canadian ICES-003. Cet appareil numérique de la classe A est conforme à la norme NMB-003 du Canada.

KCC Notice

이 기기는 업무용 환경에서 사용할 목적으로 적합성평가를 받은 기기로서 가정용 환경에서 사용하는 경우 전파간섭의 우려가 있습니다.

SBC210LM Portable Rechargeable Battery Housing

The SBC210LM's interchangeable charging modules provide a compact desktop charging station for a range of Shure Lithium-ion batteries.

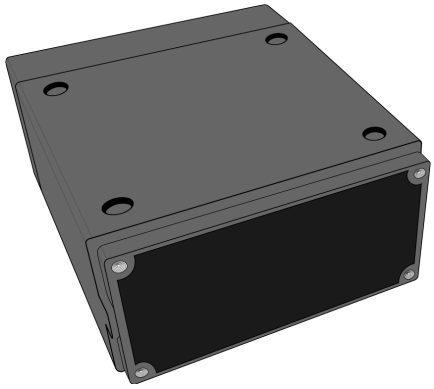

Features

- Interchangeable charging modules for bodypack and handheld transmitter batteries
- Charges batteries to 50% capacity in 1.5 hours
- Charges batteries to full capacity in 3.5 hours
- Modules are compatible with SBC210 portable charger and SBRC rackmount charging station
- Power supply included

Charger Overview

① SBC210-LM

Exterior of the portable rechargeable battery housing

② Charging Bay

Align and insert compatible charging module

③ Captive Screw Holes

Four internal threaded screw holes to secure charging module in place

④ DC Power Supply Input

Connect a compatible power supply

⑤ Charging Module

Compatible charging modules can be swapped as needed (modules sold separately)

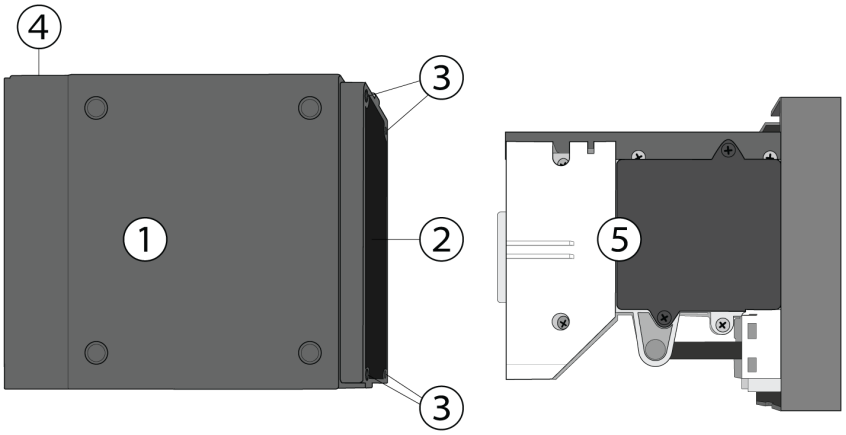

Batteries

The SBC210-LM supports the following Shure charging modules and Lithium-ion rechargeable batteries:

Module	Battery
SBC-AX	SB900C
SBM910	SB910
SBM910M	SB910M
SBM920	SB920, SB920A

Included Components

Power Supply	PS51
Mounting Screws for Charger Modules (8)	30B13476

Optional Accessories

- SBC-AX Charging Module for SB900-series battery
- SBM910 Charging Module for SB910
- SBM910M Charging Module for SB910M
- SBM920 Charging Module for SB920 and SB920A

Connecting DC Power

1. Connect the cable from the Shure PS51 power supply to the DC power supply input.
2. The white LED will illuminate when the PS51 is connected to an AC power source.

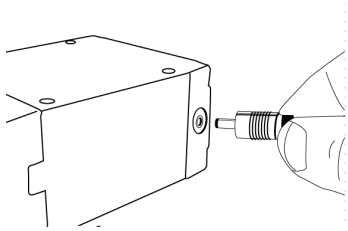

Inserting Batteries into the Charging Bay

Slide the battery into the charging bay until it locks into place. The charge LED illuminates and the charge cycle begins.

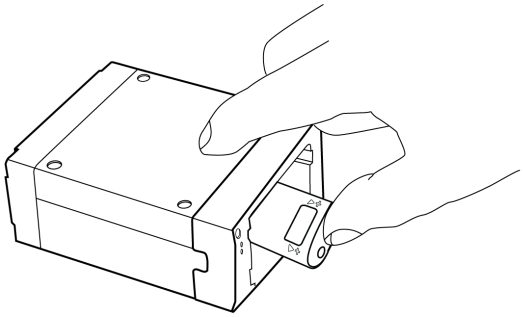

Charge Status LED

Each charger bay has an LED to indicate the status of the battery.

Red	battery charging
Green	charging complete
Off	battery inserted incorrectly or battery depleted below 3.0 volts.
Amber	charging stopped at reduced capacity (not less than 75% capacity) because the battery is too warm. To reach 100% capacity, a battery must be cooled to below 45°C.

Recovering a Battery from Deep Discharge

A deeply discharged battery is one that has been discharged to less than 3.0 volts. When the charger detects a deeply discharged battery, it automatically enters recovery mode, which charges the battery using a reduced current. A red LED indicates recovery mode. If recovery is successful, the charger exits recovery mode and charges the battery to capacity. If the battery cannot be recovered in less than 30 minutes, the red LED turns off and charging stops.

Changing the Charger Module

Caution! Remove DC power and remove batteries when installing the charging module.

1. Remove the 4 mounting screws that secure the charging module.

2. Pull the charger module to remove it from the housing.
3. Insert the replacement charger module into the housing (note the orientation of the guide rails).
4. Insert the mounting screws (4 pieces) and tighten them to secure the charging module.

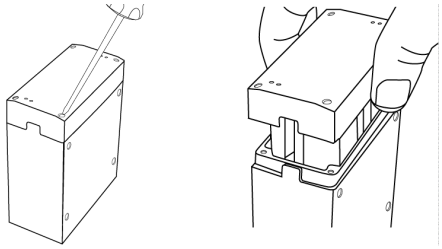

Troubleshooting

Power LED off.	DC power fault - check connection to power supply. Ensure PS51 power supply is connected to an AC power source.
Charge status LED does not illuminate.	Battery is not fully inserted.
Battery does not charge	Battery discharged below 3.0 volts. Try another battery.

Specifications

Battery Type

Up to 2 rechargeable Li-Ion batteries (SB900C, SB910, SB910M, SB920, SB920A)

Charge Time

50%=1.5 hours; 100%=3.5 hours

Operating Temperature Range

-18°C (0°F) to +40°C (104°F)

Battery Charging Temperature Range

0°C (32°F) to 60°C (140°F)

Storage Temperature Range

-29°C (-20°F) to 74°C (165°F), without batteries

Dimensions

44 x 86 x 116 mm (1.8 x 3.4 x 4.5 in.), H x W x D

Weight

425 g (15.0 oz.), without batteries or PS51 External Power Supply

Housing

Cast and extruded aluminum

Power Requirements

Input	5.5 V DC, 2.72 A maximum
Output	4.2 V DC, 1.2 A maximum

Environmental Regulatory Information

Waste Electrical and Electronic Equipment (WEEE) Directive



In the European Union and the United Kingdom, this label indicates that this product should not be disposed of with household waste. It should be deposited at an appropriate facility to enable recovery and recycling.

Registration, Evaluation, Authorization of Chemicals (REACH) Directive

REACH (Registration, Evaluation, Authorization of Chemicals) is the European Union (EU) and the United Kingdom (UK) chemical substances regulatory framework. Information on substances of very high concern contained in Shure products in a concentration above 0.1% weight over weight (w/w) is available upon request.

Recycling Information

Please consider the environment, electric products and packaging are part of regional recycling schemes and do not belong to regular household waste.

中国 RoHS

部件名称	有害物质									
	Pb	Cd	Hg	Cr(VI)	PBB	PBDE	DBP	BBP	DIBP	DEHP
电子组件*	X	○	○	○	○	○	○	○	○	○
金属零件	X	○	○	○	○	○	○	○	○	○

注 1: ○: 表示该有害物质在该部件所有均质材料中的含量均不超出电器电子产品有害物质限制使用国家标准要求。
X: 表示该有害物质至少在该部件某一均质材料中的含量超出电器电子产品有害物质限制使用国家标准要求。
注 2: 本产品大部分的部件采用无害的环保材料制造，含有有害物质的部件皆因全球技术发展水平的限制而无法实现有害物质的替代。
注 3: 以上未列出的部分,表明其有害物质含量均不超出电器电子产品有害物质限制使用国家标准要求
*:表示如果包含部分

Battery Regulatory Information

CE Notice

Hereby, Shure Incorporated declares that this product with CE Marking has been determined to be in compliance with European Union requirements.

The full text of the EU declaration of conformity is available at the following site: https://www.shure.com/en-EU/support/declarations-of-conformity.

UKCA Notice

Hereby, Shure Incorporated declares that this product with UKCA Marking has been determined to be in compliance with UKCA requirements.

The full text of the UK declaration of conformity is available at the following site: https://www.shure.com/en-GB/support/declarations-of-conformity.

EU and UK Battery Directive



In the European Union and the United Kingdom, this label indicates that the batteries in this product should be collected separately and not be disposed of with household waste. Substances in batteries can have a potential negative impact on health and environment and you have a role in recycling waste batteries thus contributing to the protection, preservation, and improvement of the quality of the environment. You should contact your local authority or retailer for details of the collection and recycling schemes available.

Note: There is no mercury content in the product.