INNERLOCK
INSTALLATION

COMPONENTS

- *InnerLock housing with spring-loaded cable spool*
- *Tube plug (size specific for ¾ and 1" tubes)*
- *Integrated cable clamp with drum-key screw*

INSTALLATION STEPS

1. Extend Cable

- Pull cable from the InnerLock spool and temporarily lock it using the drum-key screw clamp.
- The cable length should be longer than the bottom tripod tube.

2. Disassemble Stand

- Remove the upper tiers of the stand, leaving only the bottom tripod assembly.

3. Insert Cable

- Flip the bottom tripod upside down and guide the cable down through the entire length of the tripod tube until it exits past the tube joint.
- Wear gloves during installation as steel cable may cause friction.

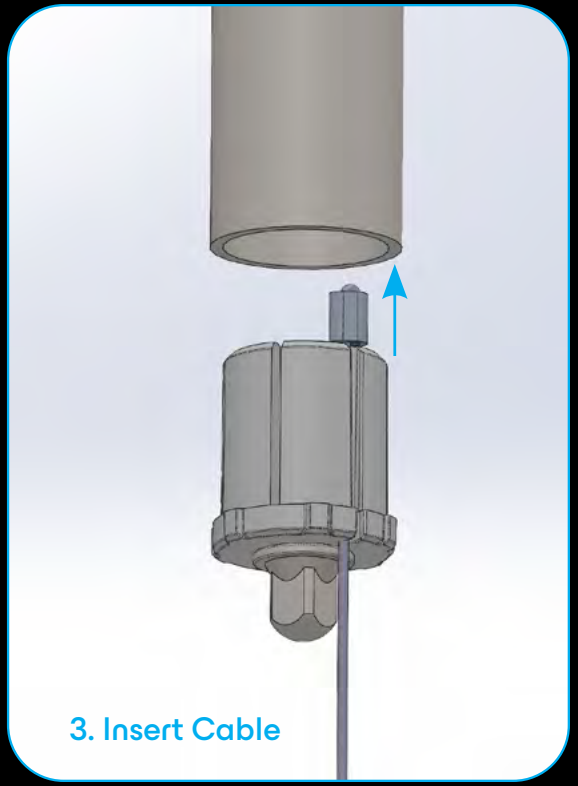

(CONTINUED)

4. Install InnerLock Housing

- Insert the InnerLock housing into the bottom tripod seat and twist until it locks in place.

5. Install Tube Plug

- Select the appropriate tube plug for the tube you want to control.
- Feed the cable through the guide slot on the tube plug until the cable is tightly in place.
- Press the plug into the bottom of the tube.



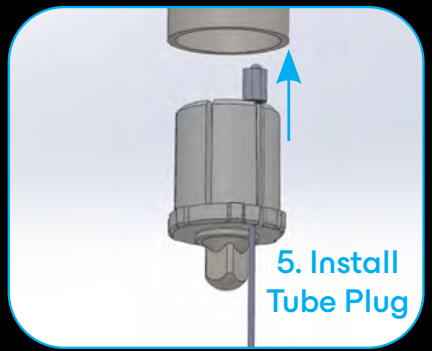

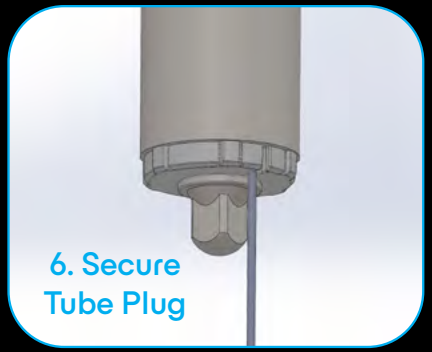

VIDEO INSTRUCTIONS

6. Secure Tube Plug

- Use a drum key to tighten the hex nut and secure the tube plug inside the tube.

7. Reassemble Stand

- Pull the cable taut, release the cable clamp, and reinstall the upper stand tiers.
- The stand is now ready to use with InnerLock height control.

NOTE: The rotation of the tube is not controlled by the InnerLock cable. Be careful not to rotate the tube in any direction more than one full rotation in order to protect the integrity of the cable.